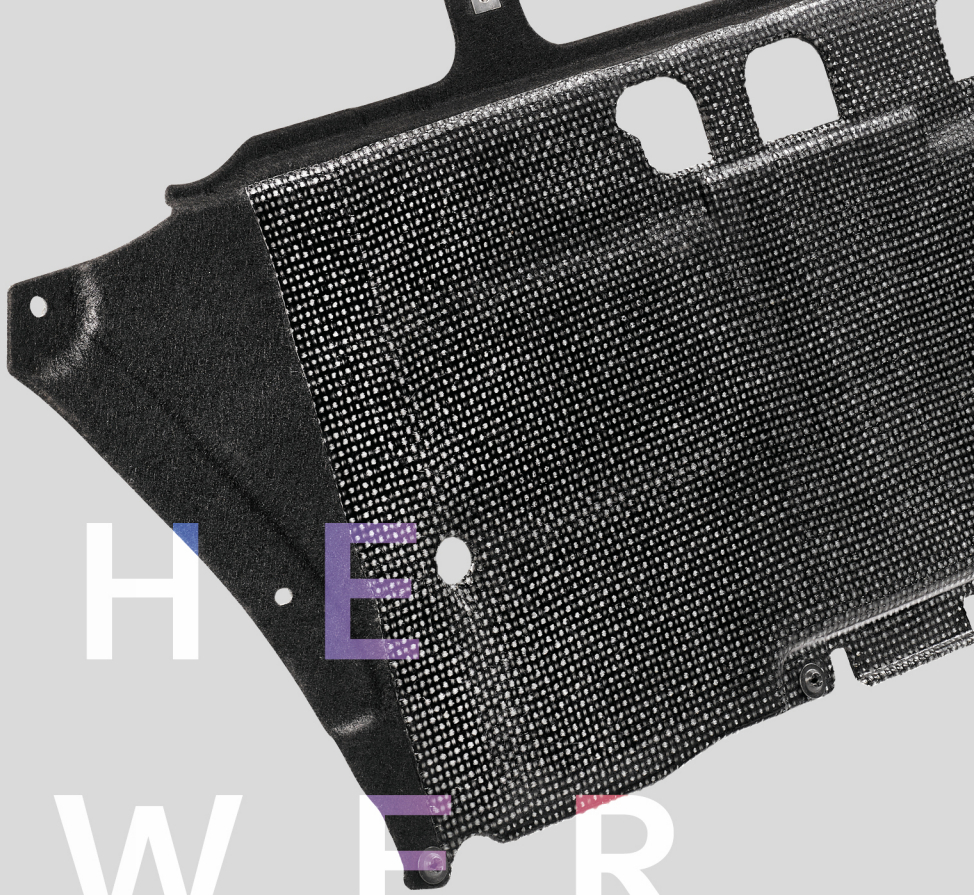

Made of LWRT (Low Weight Reinforced Thermoplastic) and glass-fiber-reinforced thermoplastic, this underbody protection is ultralight and suitable for extreme stresses at the same time – properties that make it particularly interesting for electric vehicles. The LWRT weighs just 1,400 g/m².

THE POWER OF A LIGHT TOUCH

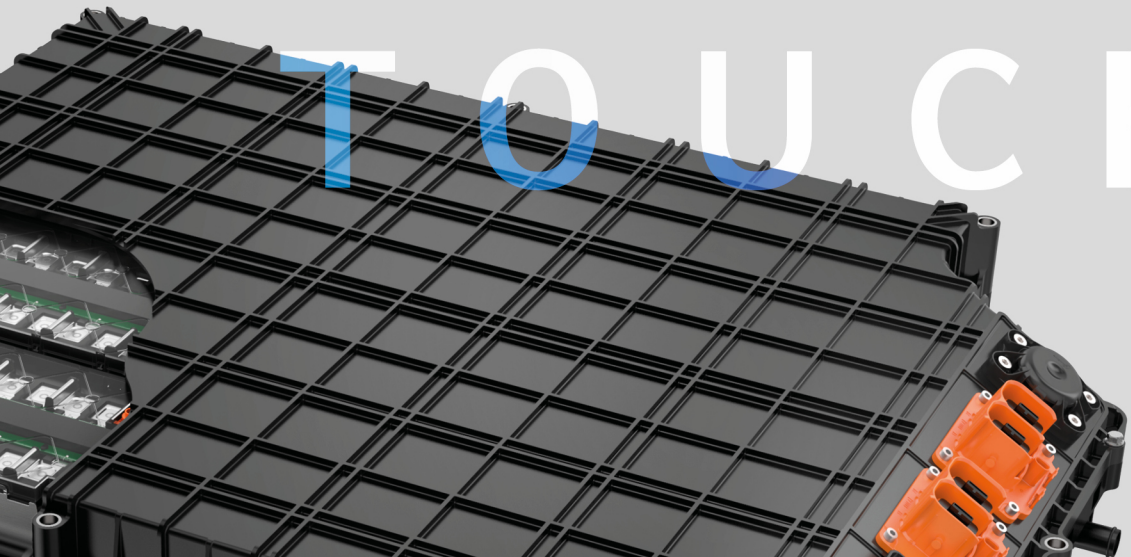

Increased safety, comfort, and vehicle dynamics combined with lower energy requirements and emissions – modern mobility is intended to be climate-friendly and efficient. This is an overarching societal aspiration that the automotive industry is meeting head on with innovations and new key technologies. Core issues such as lightweight design, which also encompasses function integration and resource efficiency, are more relevant than ever before in an age of increasing electrification.

For fossil fuel drive systems the simple formula of "lower weight = reduced fuel consumption = lower CO_2 emissions" summed up the crucial environmental benefit in a nutshell. The equivalent for electric vehicles – "lower weight = less energy requirement = longer range" – also sounds good but appears to be less convincing due to energy recovery in the case of battery-powered vehicles. There is no doubt that part of the kinetic and potential energy is returned to the battery pack system during the braking process thanks to recuperation. However, the extent to which this actually takes place has been investigated by the KIT (Karlsruhe Institute of Technology) and the Fraunhofer ICT (Institute for Chemical Technology) in a joint study using the example of a fully electric vehicle. It was discovered that a lower vehicle weight not only led to slightly lower energy requirements but above all that rolling, acceleration, and gradient resistance declined significantly. At the same time, not all of the energy was able to be recovered through recuperation.

Our efforts to achieve greater quality of life in urban centers is also shifting focus to another aspect: the German Environmental Agency investigated the causes of particulate emissions in Germany and arrived at the result that around 20% are attributable to the transport sector, over half of this being caused by the abrasion of tires and other components. Significant parameters include the driving style, tire quality, road surface, and the weight of the vehicle. The KIT and the Fraunhofer ICT have calculated that a 20% increase in tire load also leads to 20% higher abrasion. This could be expressed simply as "lower vehicle weight = reduced tire abrasion = fewer particulate emissions."

ElringKlinger is of the opinion that lightweight design offers far more advantages than merely saving weight, because the lightweight components that can now be implemented in almost every area in vehicles are far superior to conventional variants, particularly due to their increased function integration and the related cost savings. In combination with modern, precisely coordinated manufacturing processes, the wealth of "light" materials that are available enables products with complex geometries to be produced in short

Hybrid lightweight design concepts combine the best respective properties of the different materials. The image shows a rocker panel for the framework of a battery-powered electric vehicle. Thanks to the combination of aluminum and plastic, it weighs just 1.5 kilograms.

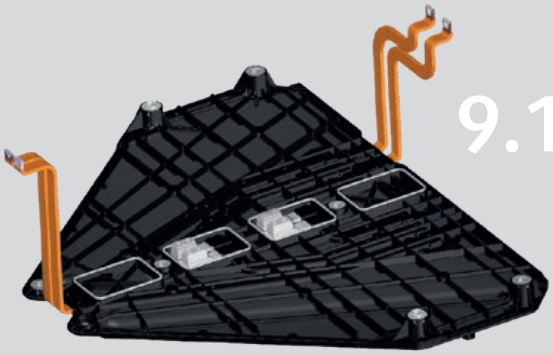

Highly integrative: weighing 9.1 kg, this intermediate plate for battery modules consists of a crash-relevant basic composite fiber structure and includes bus bars and sealing elements. It is manufactured in what is called the one-shot process, meaning that all insert parts are positioned directly in the injection molding tool. This enables maximum possible form accuracy and leads to assembly cost savings at the same time.

cycle times. Added to this is a range of additional advantages that Klaus Bendl, Head of the Lightweighting/Elastomer Technology unit at ElringKlinger, sees as further reason to continue pushing the technology forwards: "From the perspective of a manufacturer, I am delighted about the high dimensional stability, i. e., the highly precise and stable dimensional accuracy, that we can achieve with lightweight design technology in large-scale production. This may not be directly perceptible to end customers, but they get to experience something completely different, in a positive sense, namely improved vehicle dynamics with maximum possible safety."

Plastic-based composite materials such as continuous-fiber-reinforced thermoplastics, for example, are being used with increasing frequency to save weight in structural and energy-absorbing components. They are as solid and resilient as metal but can be processed faster and more easily. This includes organo sheets and unidirectional tapes (UD), which are reinforced with carbon, glass, or aramid fibers, for instance. Thanks to their very good mechanical properties, these ultralight material compositions are interesting for crash-sensitive structural areas such as the underbody, battery environment, and front or rear end, which are vulnerable in the event of crashes. They are highly flexible in terms of their formability and surface impact, thus allowing aerodynamically optimized designs, including designs with high noise absorption, depending on application area. For instance, ElringKlinger processes a glass-fiber-reinforced, unidirectional continuous fiber tape to shield the underbody of battery packs. It is lighter in comparison with metal, aluminum, and titanium variants, and offers higher thermal insulation and, above all, considerably better impact energy absorption. Particularly in the case of battery-powered electric vehicles, the latter is of enormous importance for occupant safety in the event of a crash.

For such vehicle components, the product developers work out the precise form and combination of the materials to be used until the optimum is achieved. Biometric structures are often used to make components stiffer, more stable, and lighter. The engineers use software and topology optimization to calculate the points at which material is superfluous and where areas have to be reinforced to counteract excessively high stresses. This is how ElringKlinger R&D engineer Matthias Biegerl designed a so-called hybrid rocker panel as a load-bearing element for the framework of an electric vehicle together with project partners as part of a research project. The component is character-

» For us, lightweight design means function integration, weight reduction, and production efficiency in one. «

Klaus Bendl, Vice President Lightweighting/Elastomer Technology, ElringKlinger AG

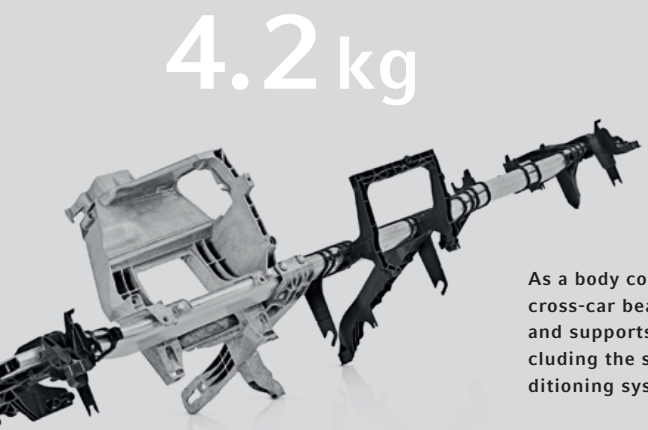

As a body component, the 4.2 kg cockpit cross-car beam performs a stability function and supports the cockpit elements, including the steering column, airbags, air conditioning system, and instrument panel.

ized by an innovative tool concept: it was specifically reinforced by means of plastic injection molding. This improved what is referred to as its buckling resistance, which is important for high impact energy absorption in the event of a crash. Biegerl combined the best properties of both metal as well as short and continuous fiber-reinforced thermoplastics: the higher stiffness of the metal and the greater strength of the organo sheet. The cockpit cross-car beams and front-end carriers supplied by ElringKlinger as series-production components are also hybrid parts consisting of metal and plastic as base materials. Although they are up to 40% lighter than conventional, pure metal variants, these body components are characterized by high crash safety and increased function integration. This is supported by a special manufacturing process that combines hydroforming with plastic injection molding in a single process step: as the basic material, an aluminum tube is brought to the required shape and plastic elements are molded on in the same tool sequence.

"In lightweight design, we combine function integration, weight reduction, and production efficiency. This succeeds because material and process know-how are intermeshed throughout the entire development phase of our products," sums up Bendl, and concludes by pointing to another of the technology's advantages: "The thermoplastic materials can be regranulated, meaning that they can be recycled at the end of a vehicle's life and reused as raw material in a completely new product cycle somewhere on our planet."

LIGHTWEIGHT E-MOBILITY

Comfort, safety, and a protected environment are required to make driving in an electric vehicle a positive experience. The key technology of lightweight design, which involves far more than mere weight reduction, makes an important contribution to this.

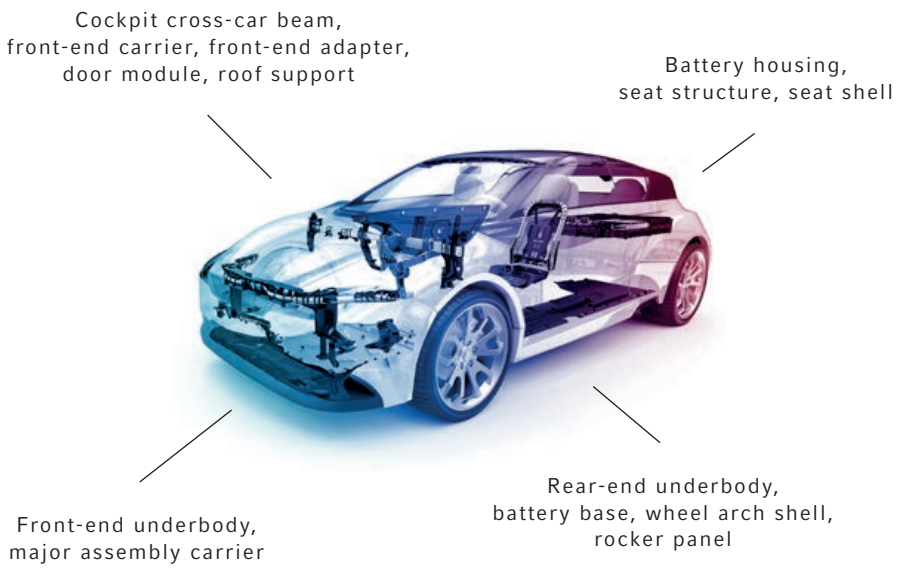

For ElringKlinger, a number of possible applications for lightweight design solutions are conceivable in electric vehicles – the figure shows some of them.